# VE Technology
# Introduction to Mercury Sampling

**VE Technology Sampling System for the (Manual) Measurement of Trace levels of Mercury in Natural Gas**

**The Background**

The measurement of trace levels of mercury in natural gas is a complex subject and the methodology is covered by a number of national and international standards, including ASTM D-6350 and ISO 6978.

Typically these methods are what might be considered to belong in a chemist's lab, however a number of companies have developed robust analytical instruments that perform the measurement perfectly well and that are easy to use by the trained technician on site, or other suitable location.

The method requires a sample of natural gas, of known or measured mass, to be passed over a gold-quartz or activated carbon cartridge or "trap" in a glass tube, at low pressure. All the mercury in the sample is adsorbed on the gold/carbon within the tube. The glass tube is then placed in the analysing instrument, which liberates the mercury from the trap in a way that allows the total mass of mercury to be measured. In this way, by comparing the total mass of mercury measured to the total mass of gas sampled, the concentration of mercury in the natural gas can be determined.

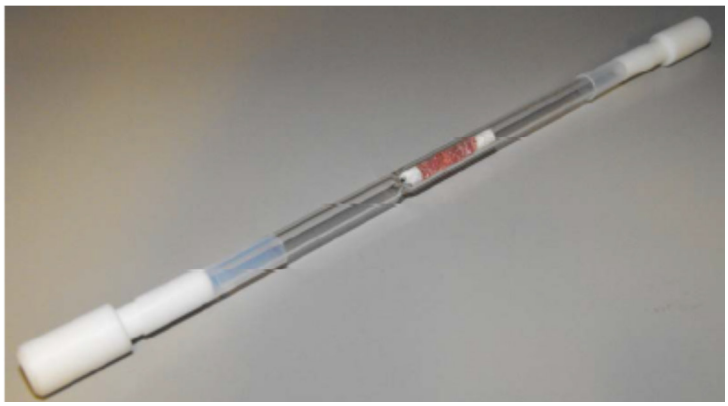

**Figure 1**: Example of a gold-quartz cartridge in a glass tube, typical for Mercury capture from gaseous samples.

**The Problem**

There are several challenges that need to be considered and combatted to achieve effective Mercury sampling. You must be able to accurately measure the mass of mercury captured on the trap and the mass of natural gas that passed over the trap, you must ensure that no mercury was lost (or picked up) between the main pipeline and the glass tube, and you must know how long it took the sample to reach the glass tube from the source. The goal is to obtain a representative sample and be able to correctly allocate that sample to a specific mass from the main gas flow.

This is an increasingly complex task the more you investigate the factors and phenomena in pursuit of idealistic sampling, as some of these are not well known or understood:

1. Mercury in its gaseous form is arduous to measure, and the trace amounts that are typically found in natural gas are soon lost (taken out) by adsorption processes onto the surfaces of the components it contacts. This is due to the relative chemical potential of mercury that causes it to readily come out of suspension and bind to particles, surfaces etc.
2. There are materials that mercury does not stick to, like glass and PTFE, but these types of

**VE Technology, Orbital Global Solutions, Orbital, Cold Meece, Stone, Staffordshire ST15 0QN**
T: 01785 857007
E: enquiries@orbitalglobalsolutions.com
W: www.orbitalglobalsolutions.com

materials are generally not welcomed by the process or piping engineer, nor capable of withstanding the pressure and temperatures involved.

3. Mercury also binds to particulates, at every opportunity, and can become obscured inside droplets and aerosols. So if we install filters or membranes to remove particles, droplets and aerosols, they will also remove the mercury from the sample.
4. Mercury might be 'lost' by changes in temperature, particularly cooling. Therefore the Joule Thomson cooling effect caused by reducing the pressure from pipeline condition to the conditions necessary for the gold trap or online analyser needs very special attention, and at molecular level.
5. If the conditions are correct, previously adsorbed mercury from previous samples can desorb and enter into subsequent, 'fresh' sample. The consequence of this is that you measure higher mercury levels than what is actually present at the time of measurement.
6. Because you are measuring trace levels of mercury, accurately measuring the mass of natural gas needs to be extremely precise. Slight changes in ambient conditions (temperature, atmospheric pressure, etc.), or 'error margins' in your equipment can have a significant effect on your calculated concentration.

**The Solution**

VE Technology is a ground-up sampling philosophy that takes all these problems into consideration. Each part of the sampling system, of which there are as few as possible, has been specially selected and modified or designed as bespoke parts from new (minimising, simplifying and optimising all parts of the system).

VE Technology utilizes a number of basic principles to ensure that the sample retains its identity* from probe tip to "trap" point. We start with, and maintain, the principle that sample identity is fundamental. We regard the sample like evidence in a crime scene investigation: if we do anything that contaminates the evidence we lose the identity of the subject. It does not matter how accurate your analyser is, if the sample has lost its identity between pipeline and analysis, the readings are invalidated. The consequences of receiving incorrect data can be worse than receiving no data at all!

**The term 'identity' is crucial to the VE Technology philosophy. It describes the exact physical and chemical properties of a particular body of gas, which are as unique as a finger print. This 'finger print' is very easily corrupted by temperature, pressure, violent turbulence and interaction with absolutely any and every thing! However the preservation of identity is the essence of good sampling, and should be the driver for all system designs and construction; a notion overlooked or ignored by the industry until the inception of VE Technology.*

**VE Technology principles are:**

1. Use the absolute minimum necessary parts in the sample pathway – every part that contacts "live" sample has the potential to contaminate the evidence.
2. Put every control mechanism that is necessary outside the live sample pathway if it is at all possible, without creating dead legs.

**VE Technology, Orbital Global Solutions, Orbital, Cold Meece, Stone, Staffordshire ST15 0QN**
T: 01785 857007
E: enquiries@orbitalglobalsolutions.com
W: www.orbitalglobalsolutions.com

3. Use a flow path that prevents mixing and flow circulation; that has no dead spaces or crevices where contamination or sample can hide.
4. Use treatments that minimise wetted surface area and are inert to mercury vapour.

**VE Technology accomplishes this by:**

1. A unique, aerodynamic probe tip that dynamically rejects particulates and droplets from entering the sample system thereby practically eliminating the need for filtration (a small, flow through, SilcoNert™ coated filter is provided for protection).
2. A probe tip profile that eliminates aerosol generation.
3. A probe profile that eliminates vortex induced vibration so sampling from within the process causes no concerns for the plant or pipeline operator.
4. A true heat exchanger that protects every molecule from Joule Thomson cooling problems. Designed, approved and certified for use in the most arduous explosive atmospheres and extremes of environment. It is ATEX and IECEx approved Zone 0 (Baseefa10ATEX0249X).
5. A 2mm (0.08 inch) diameter sample pathway from probe tip plus minimal possible diameter changes in system, preventing recirculation of sample gas.
6. All wetted surfaces electropolished and SilcoNert™ treated.

We can provide a number of simple illustrations of the design improvements made by VE over conventional, less refined and less effective designs.

**How is this achieved?**

We start with a VE Technology sampling probe that connects directly onto and protrudes into the process plant or pipeline. The probes are available in standard fixed or retractable design and in many special forms for sampling from within catalytic beds/processes for example. The connection to the plant is by NPT thread or flange, of any type, and typically with pressure ratings up to 150 Bar (2150 PSI), although non-standard designs are available.

There are 3 fundamental aspects of the VE probe that allows the rest of the system to work perfectly. Without these, you will have already lost the identity of your sample before you even get out of the main pipeline.

1. Aerodynamic tip (particulate rejection, elimination of aerosol creation)
2. Helical strakes (eliminate vortex shedding and associated problems/safety concerns)
3. 2-part structure (strong enough, but precise, electropolished and SilcoNert™ coated small bore sample pathway)

**VE Technology, Orbital Global Solutions, Orbital, Cold Meece, Stone, Staffordshire ST15 0QN**
T: 01785 857007
E: enquiries@orbitalglobalsolutions.com
W: www.orbitalglobalsolutions.com

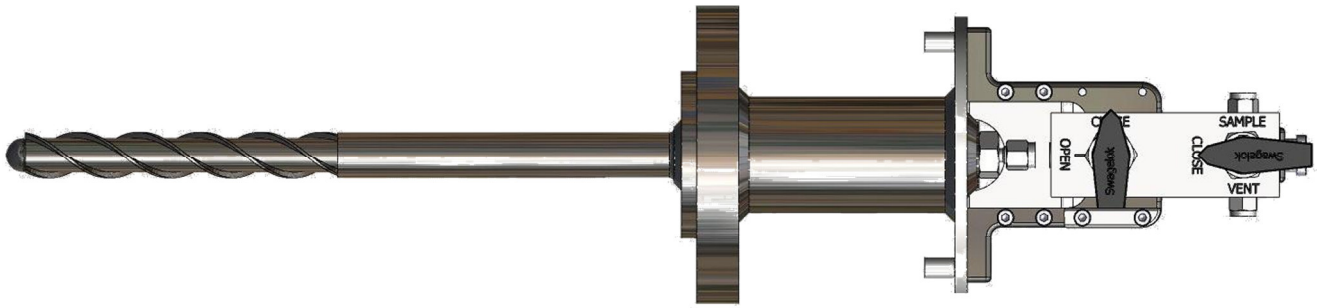


**Figure 2**: VE *Technology* computer generated image of the VE Fixed Sampling Probe with integrated double block and bleed functionality. A data sheet for the VE sample probe is available.

Using inferior sampling probes means that the user is obliged to use a large filter, cannot electropolish and SilcoNert™ coat, cannot eliminate particulates and aerosols, cannot safely sample from the correct position within the pipeline, etc. The issues caused by not addressing root causes of sampling error are many!

The retractable design allows the probe to be connected and inserted into a live pressurised plant/pipeline through a suitable pre connected ball valve or similar.

Now that we have a high pressure representative sample (the outlet of the sample probe), the next challenge is to reduce the pressure so that it is suitable for passing through the sorbent trap. Again, whilst this sounds simple, great care must be taken to ensure the sample remains representative.

Using the VE Conditioning Unit (VECU) - which is mounted immediately at the head of the probe to reduce the high pressure sample to the absolute minimum for quick response - the system carefully pre-heats the sample of gas beyond the amount of JT cooling that would be created, prior to reducing the pressure.

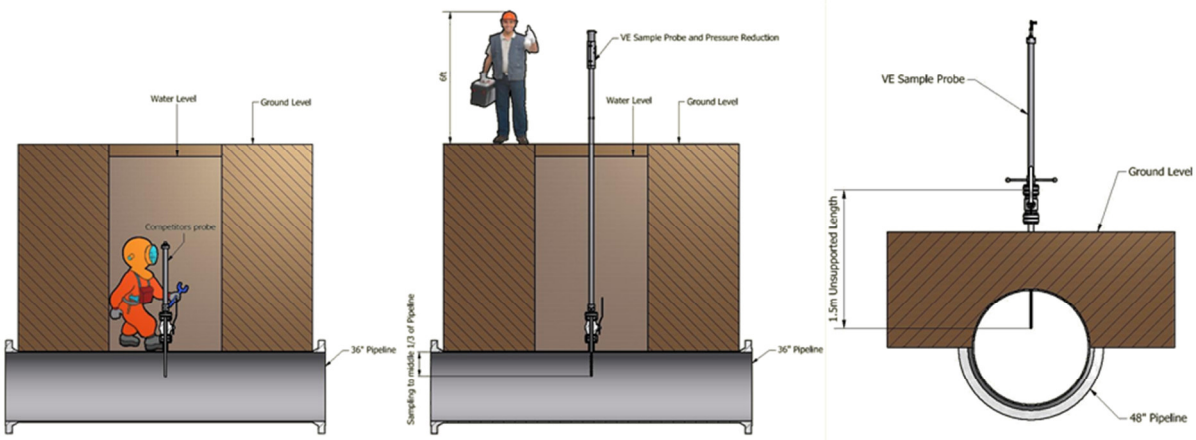


**Figure 3**: Applications for the VE Retractable Probe – going where no probe has been able to go before.

This guarantees that there is no risk of crossing the dew point curve that would immediately eliminate any


**VE Technology, Orbital Global Solutions, Orbital, Cold Meece, Stone, Staffordshire ST15 0QN**
T: 01785 857007
E: enquiries@orbitalglobalsolutions.com
W: www.orbitalglobalsolutions.com

possibility of having a representative sample if allowed to happen (as seen in some more primitive products available on the market). The VECU carries full ATEX and IECEx certification for use in Zone 0 areas (soon to also carry Class I Div I and Class I Zone 0 certification - expected Q3 2013). A data sheet is available with more detailed VECU product information.

The VECU also holds the special filter and the critical orifice (used to reduce the pressure) in a remarkably simple to use-and-maintain arrangement. These 2 components, which are housed in specially designed, electropolished and SilcoNert™ coated housings to ensure precise purge through-flow, are the only 2 components in the entire VE technology sample system live pathway. We recommend changing the filter approximately every 6 months, even though University testing on live UK sites confirmed only 0.03 micrograms of contamination on a filter after 6 months continual use (all of which was less than 1µm in size and therefore would like to have passed through typical filters into the analyser).

**Figure 4**: The VE Conditioning Unit (VECU).

Anything that is captured by the filter is a 'hot spot' for contaminating future samples, so this is another dramatic design improvement. All remaining items, comprised by our Analyser Interface Module, (back pressure regulation, pressure gauges, temperature measurement, relief valves, etc.) are all positioned in the fast loop or after the sorbent trap so they cannot contaminate the sample and do not form a dead leg where re-circulation and mixing might occur.

The fully integrated VE system also ensures accurate calculation of the mass of natural gas that passes over the trap. By providing accurate, detailed-scale flow metres and in line temperature measurement combined with atmospheric pressure readings, an exact measurement can be made ensuring the calculated concentration is correct.

The entire system can be attached to the head of the probe, allowing easy access and operation of the manual sampling equipment. This significantly reduces installation costs, reduces the volume and response time of the sample system and ensures the sample is carefully protected throughout the entire system.

If the process conditions or geometry do not allow this simple solution to be installed (i.e. if it is difficult to access the cabinet for regular use), the pressure reduction can be done at the head of the sample probe and an electropolished-and-SilcoNert™ coated length of trace heated sample tubing can be taken to the analyser interface module at a remote location eliminating any cold spots and maintaining the constant CSA.

Care is taken to maintain highest performance in every configuration.

**VE Technology, Orbital Global Solutions, Orbital, Cold Meece, Stone, Staffordshire ST15 0QN**
T: 01785 857007
E: enquiries@orbitalglobalsolutions.com
W: www.orbitalglobalsolutions.com

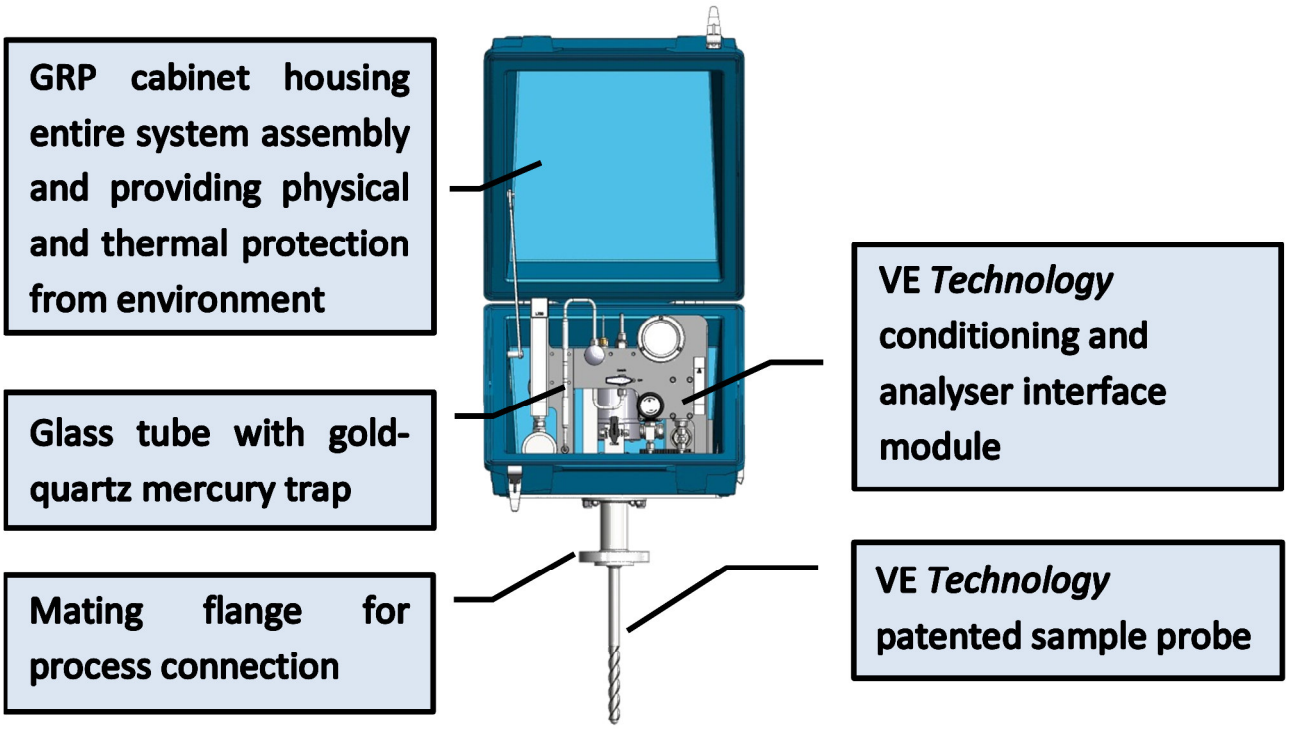


**Figure 5**: Illustration of complete VE mercury sampling system that sits on top of probe.

identity. Typical systems do the best they possibly can with components and 'concepts' that are available on the market.

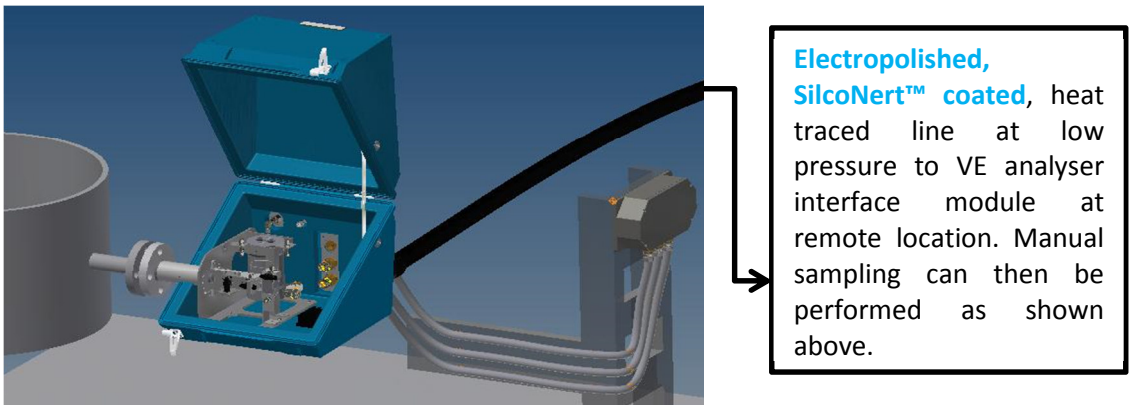


**Figure 6**: Illustration of application of VE mercury sampling system when standard design not viable e.g. if access to the cabinet is limited for collecting the trap sample.

Every aspect of the VE system has been designed and built to ensure the sample is representative and has the correct

The VE system starts from the probe tip and delivers the ultimate solution for maintaining identity - if something we needed to achieve this didn't exist; we designed it from scratch - no compromises.


**VE Technology, Orbital Global Solutions, Orbital, Cold Meece, Stone, Staffordshire ST15 0QN**
T: 01785 857007
E: enquiries@orbitalglobalsolutions.com
W: www.orbitalglobalsolutions.com

# VE Technology
# Introduction to Mercury Sampling

**About Orbital Global Solutions**

Orbital Global Solutions is the product division of Orbital Gas Systems, a specialist gas engineering company delivering integrated instrumentation and engineered solutions to the gas utilities, industrial process and environmental industries.

Since its formation in 1984 Orbital have achieved consistent and sustained growth by providing an unrivalled level of engineering excellence and service. Over the last 3 decades Orbital have developed thoroughly engineered solutions, significant resource, a wide portfolio of products and a proven track record of safe and successful project delivery.

Orbital Global Solutions was formed to deliver some of the most innovative and exciting products and solutions to the global hydrocarbon sampling and property measurement market.

**VE Technology™** Sample Probes, Integrated Sampling Solutions and Thermowells. This exciting facet of the product portfolio puts us ahead of the rest of the market in delivering the safest and highest quality process sampling and property measurement, and will provide global access of this invaluable technology to customers while delivering best possible value. The VE Technology Integrated Sampling Solutions are easily configured to interface to, and improve performance of all GCs and other gas analysers. Delivering the ultimate in terms of safety, quality, speed, accuracy and environmental impact through both standard and customised solutions in the natural gas and other markets.

**GasPT** is designed specifically for the Natural Gas industry with applications in transmission, bio methane and anywhere where the fast, accurate, reliable and safe analysis of CV/BTU, WI, RD, Z, TAR to ensure pipeline quality is required.

**GasPTi** is an integrated sampling and measurement system that combines the GasPT and VE Technology concepts in a fully integrated, rapid and highly accurate pipeline-mounted solution: No kiosk required, no costly calibration and support gases with a significant reduction in footprint and maintenance.

Please visit our website or contact one of our sales representatives for more information

**VE Technology, Orbital Global Solutions, Orbital, Cold Meece, Stone, Staffordshire ST15 0QN**
T: 01785 857007
E: enquiries@orbitalglobalsolutions.com
W: www.orbitalglobalsolutions.com